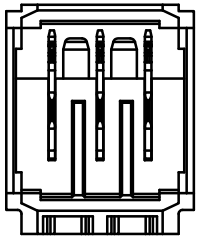

Kontaktübersicht:
contacts overview

L = lang / *long*
M = mittel / *middle*
S = kurz / *short*

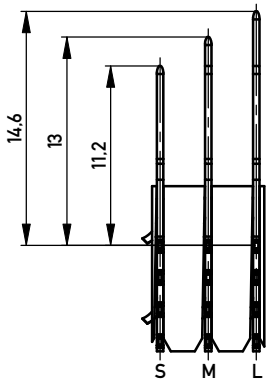

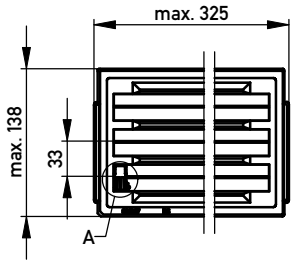

M 1:5

verpackt in Tray
VPE: 72 St.

tray packaging
packaging unit 72 pcs.

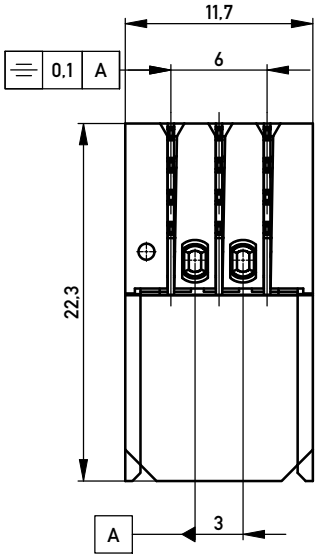

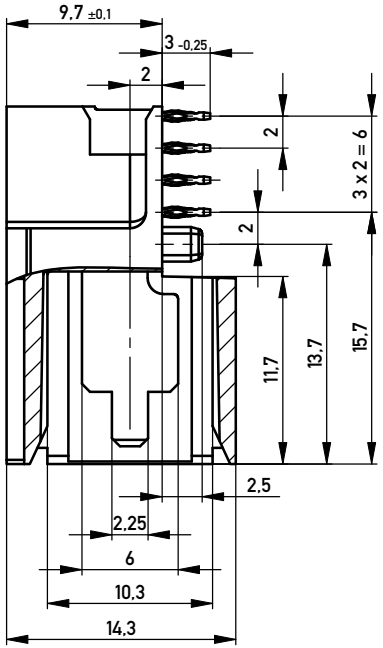

Bestückungsplan /
contact layout

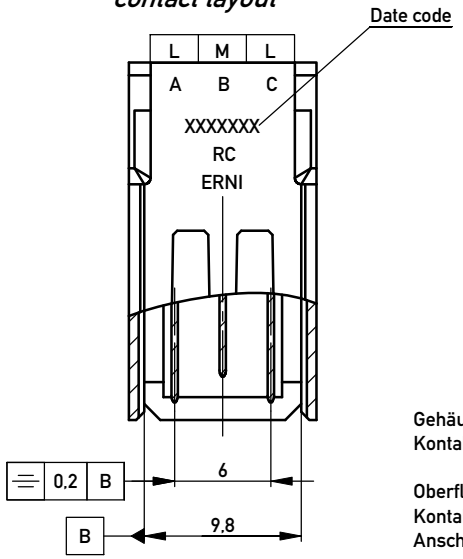

DETAIL A
MAßSTAB 1 : 1

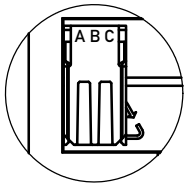

Gehäuse / *housing*: PBTP grau 30% GF / *PBTP grey 30% GF*
Kontakte / *contacts*: Phosphor Bronze / *phosphor bronce*

Oberflächenbeschichtung / *plating*:
Kontaktbereich / *mating area*: 0,65µm PdNi, 0,1µm Au
Anschlussbereich / *termination*: 1,5-3µm Ni, 0,5-2µm Sn matt

Anforderungsstufe 2 / *class 2*

Lochbild für Leiterplatte /
Board hole pattern

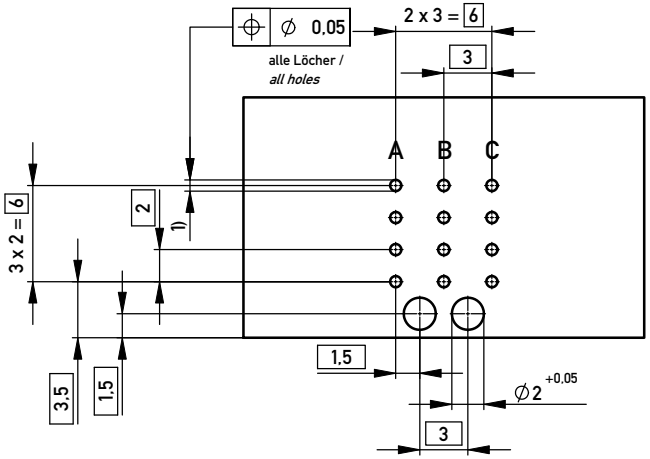

1) ∅0,6 ±0,05 Durchmesser des metallisierten Loches
∅0,6 ±0,05 Diameter of finished plated-through hole

Schichtaufbau im metallisierten Loch siehe Zeichnung 114406 / 164062 Nr.1
Metal plating of plated-through hole see drawing 114406 / 164062 No.1

Information:	Tolerances	All Dimensions in mm	Scale 3:1
All rights reserved. Only for Information. To ensure that this is the latest version of this drawing, please contact one of the ERNI companies before using.	Subject to modification without prior notice. Drawing will not be updated.		Designation: ERmet Messerleiste PM 14,3 / *ERmet Male PM 14,3*
k 19.11.2010 / Index Date		ERNI www.ERNI.com	114401 — I — A3
			Class ERMPM

Copyright by ERNI GmbH
Proprietary notice pursuant to ISO 16016 to be observed.